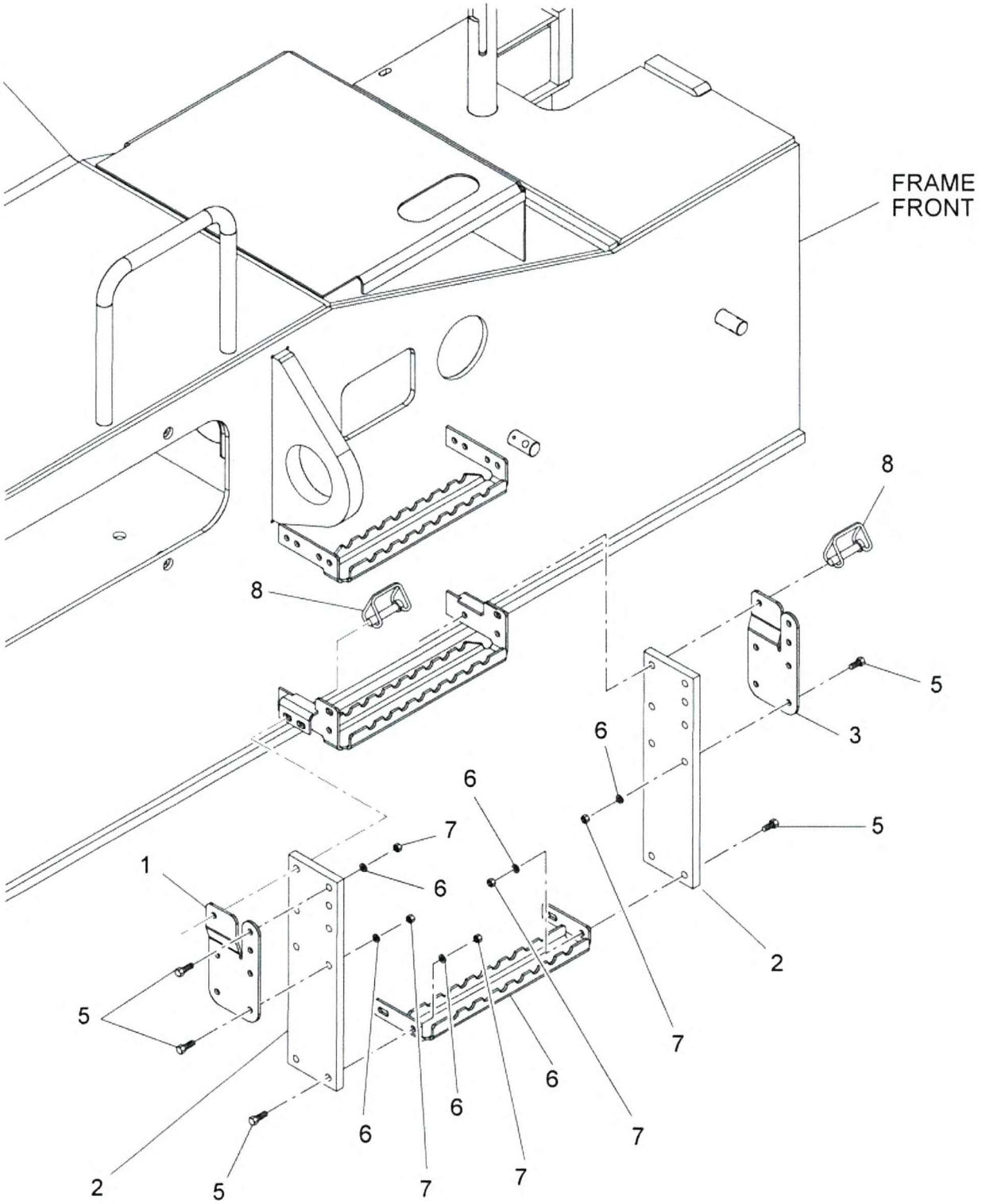

2189110028

(SHEET 1 OF 1)